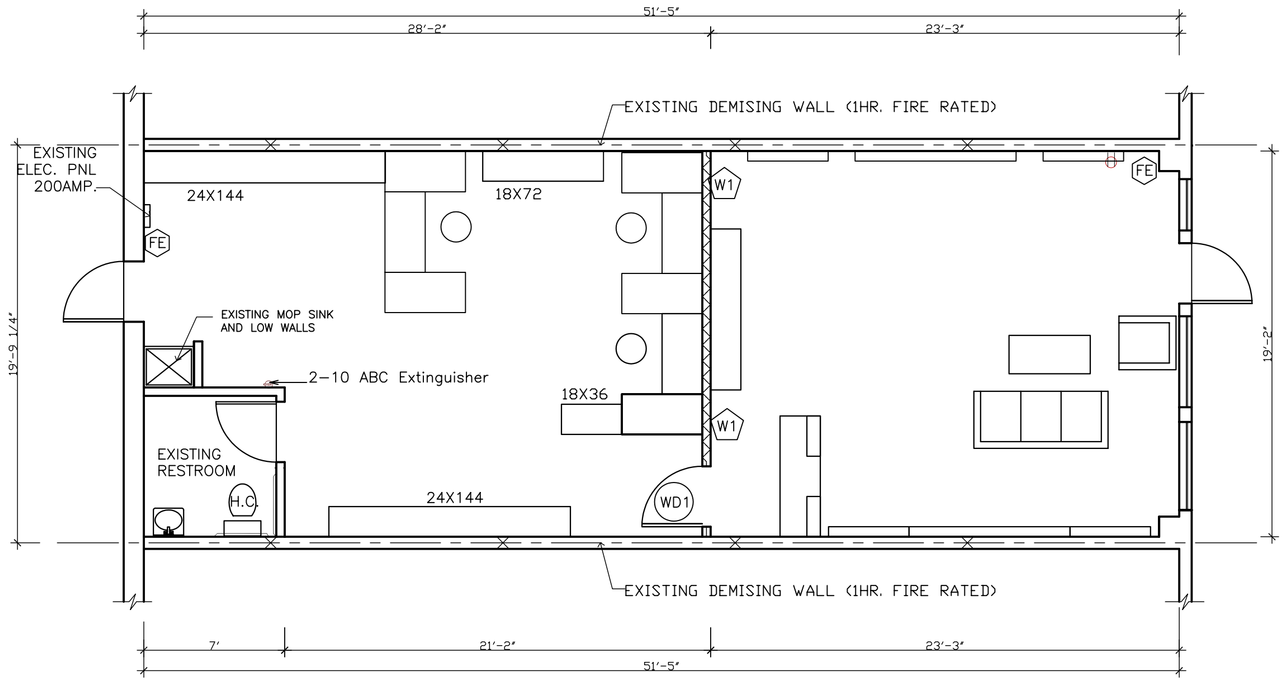

FLOOR PLAN

3/16" = 1'-0"

TOTAL AREA = 1,000 SQ.FT.

FE FIRE EXTINGUISHER

OCCUPANCY LOAD CALCULATION

FRONT SALES	360 / 30 GROSS = 13 PEOPLE
CASH COUNTER	
COFFE COUNTER	86 / 100 GROSS = 1 PEOPLE
BACKROOM	554 / 300 GROSS = 2 PEOPLE
	16 PEOPLE

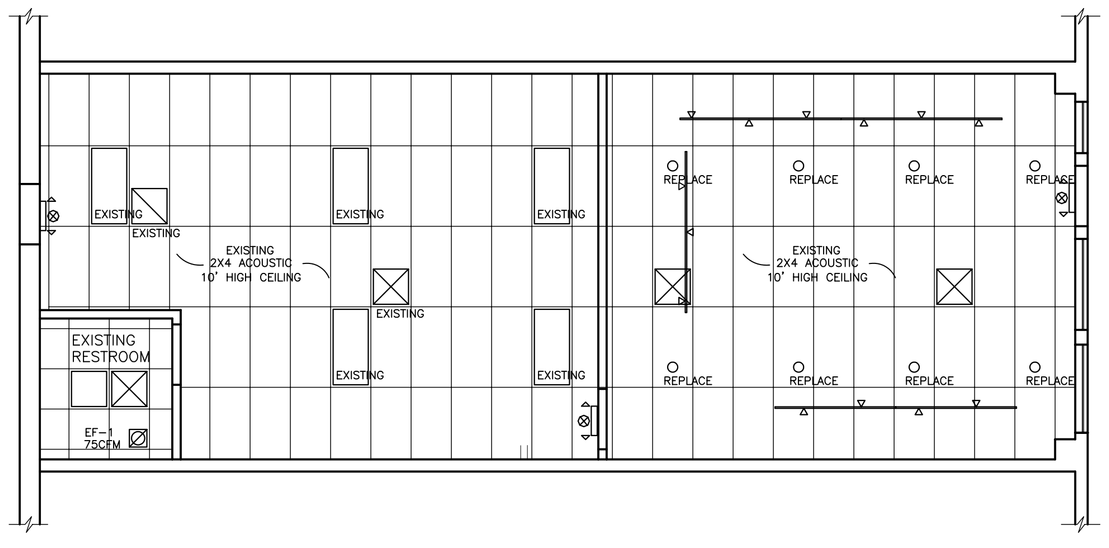

EXISTING CEILING PLAN

3/16" = 1'-0"

GENERAL NOTES

1. All works shall be perfomed in accordance with all applicable codes and local ordinance.
2. All Mechanical and Electrical works shall conform to their respective National codes of latest edition and local ordinances.
3. Contractor to obtain all permits and shall submit sign shop drawings for approval by landlord.
4. The contractor shall provide all materials and execute all work in accordance with all local and applicable building codes and requirements.
5. The contractor and subcontractors shall purchase and maintain certifications of insurance for workmen's compensation, public liability, and property damage for the limits as required by law and the landlrod.
6. All structural wood framing shall be labeled fire retardant treated lumber.
7. All dimensions are approximated and must be verified in the field.
8. Contractor shall provide adequate bracing or shoring for all work during the construction period.
9. All interior finishes shall be class "A" min. Flame spread as per code.
10. Exit doors shall be openable from the inside without the use of a key or any special knowledge or effort.
11. Contractors shall maintain the job site in a clean, orderly condition, free of debris and litter. Each contractor sall, immediately upon completion of each phase of his work, remove all trash and debris which results form the performance of his work.
12. Contractors shall protect new and existing finishes and construction from damage which may occur during construction. Damage to new and/or existing finishes and construction shall be reparied or replaced (the owner decision) with dentical material at the Contractor's expense.
13. This building is sprinklered.

DOOR SCHEDULE

DOOR #	DOOR SIZE	DOOR MATERIAL	DOOR TYPE	DOOR FRAME	HDWR	REMARKS
WD1	3' X 6'-8"	WD.	FLUSH	WD.	PUSH/PULL CLOSER	

NOTE: a. PAINT COLOR TO DOOR TO FOLLOW CORP. REQUIRED COLOR.
b ALL DOOR HARDWARE TO BE ADA COMPLIANT

FINISH SCHEDULE

ROOM NAME	WALLS	BASE	FLOOR	CEILING
SALES AREA	GYP. BD. PTD.	VINYL	CARPET	EXISTING 2X4 ACOUSTIC
STORAGE	GYP. BD. PTD.	VINYL	V.C.T.	EXISTING 2X4 ACOUSTIC

NOTE: a. COLOR TO BE DECIDED BY OWNER.
b. WALL PAINT TO BE LATEX ENAMEL SEMI-GLOSS U.N.O..

[FIXTURE LEGEND]

- Emergency light fixture, self-contained unit
- Emergency Exit Sign, stencil face; red letter color; double fixture running direction.
- Ceiling Grids & Panels
- Fluorescent Light, 40W 4' Strip.
- Fluorescent Light, 32W 2x4 lay-in fixture
- Air Return Grill
- Air Supply
- Exhaust Air Motor Operated
- Track Light

WALL LEGEND

W1 NEW PARTITION - 1/2" GYP. BD ON BOTH SIDES OF MET STUDS(25 GA) @ 24" O.C.

EXISTING WALL

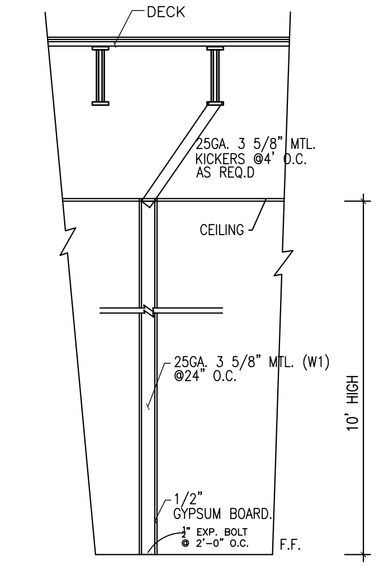

W1 25GA Metal Stud Partition
SCALE : NONE

NOTE: PLUMBING WALLS ARE 6" STUDS.

LIFE LINE
1715 HOWELL MILL RD.
SUITE# C8-A
ATLANTA, GA 30318

GEORGIA CHUNG CHENG CHANG CERTIFICATED NO.0269 REGISTERED ARCHITECT

CUSTOM DESIGN & DEVELOPMENT CORPORATION
5720 BUFORD HWY.
SUITE 200
NORCROSS, GA 30071
TEL: (770)-326-9868
FAX: (678)-278-3696

FLOOR PLAN
CEILING PLAN
NOTES & SCHEDULE

REVISION	BY

DRAWN BY:
SCALE: AS NOTED
PROJECT NO:
DATE: 01/20/16
SHEET
A1
OF SHEETS

"ISSUED/RELEASED FOR CONSTRUCTION"