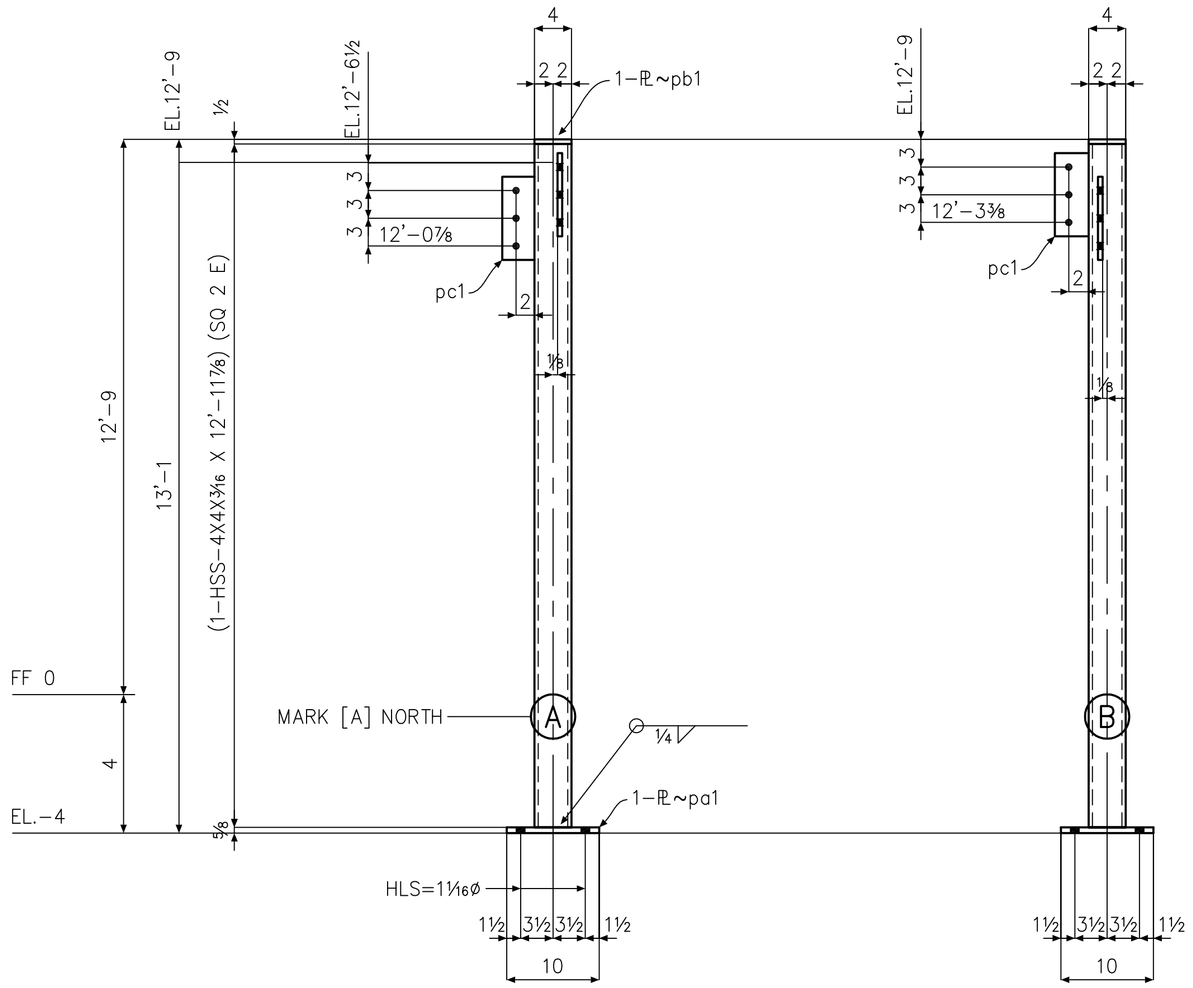

2 – COLUMNS – D1C1PL

12–¾–A325–1¾

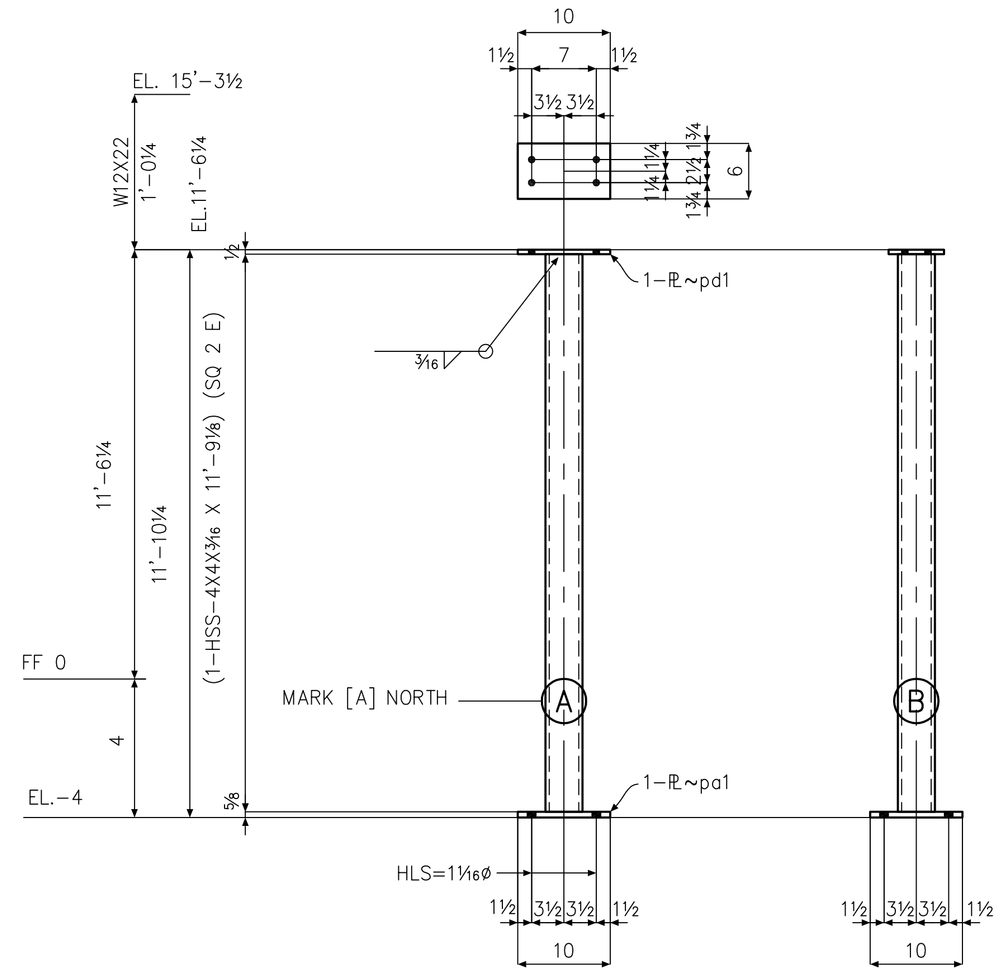

1 – COLUMN – D1C2

4–¾–A325–2

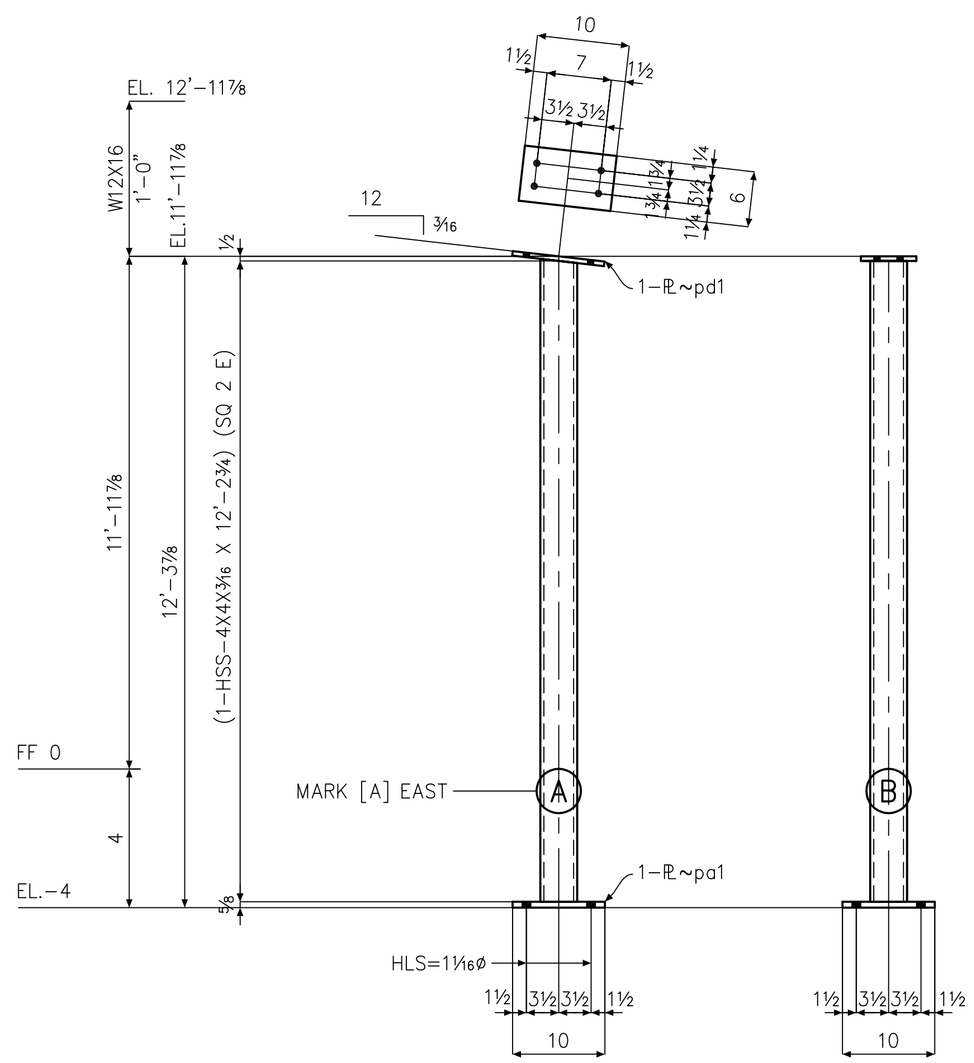

1 – COLUMN – D1C3

8–¾–A325–2

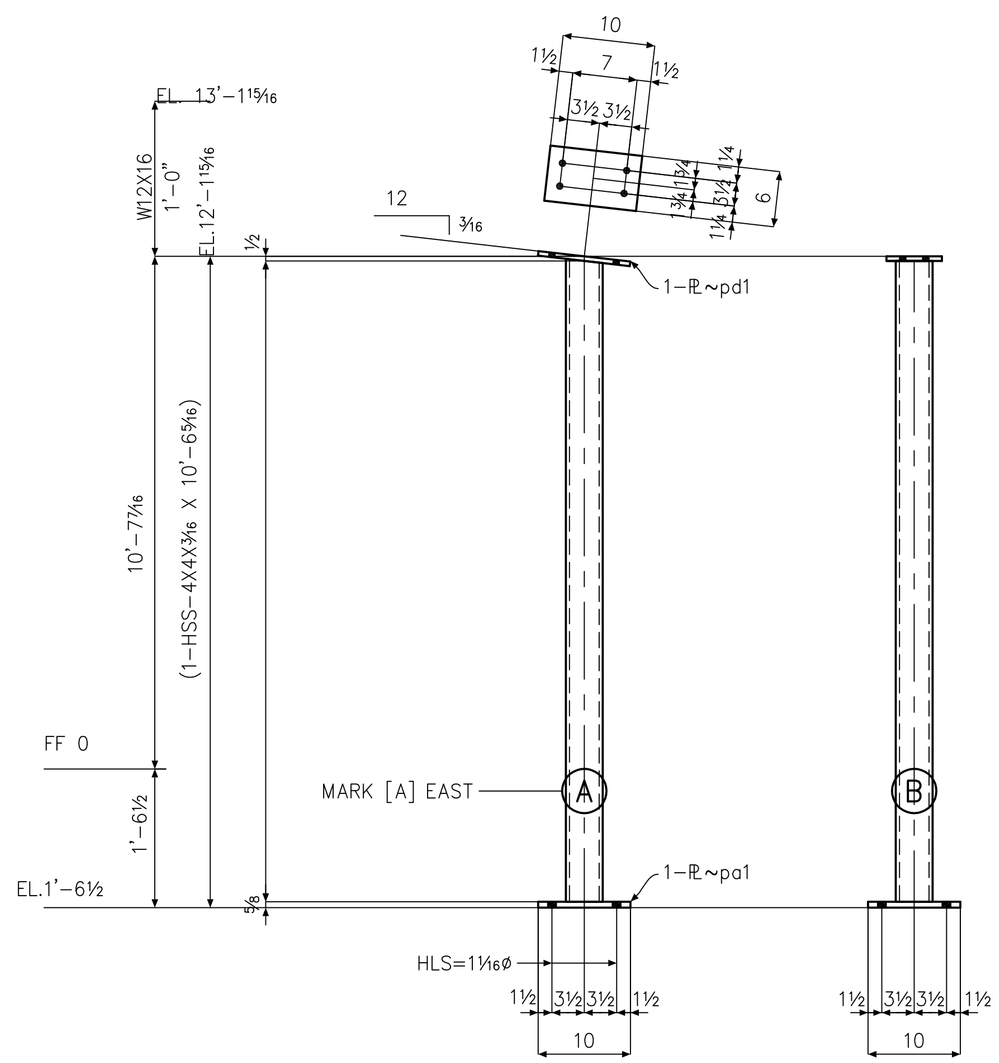

1 – COLUMN – D1C4

8–¾–A325–2

SHOP NOTE: VERY IMPORTANT.
PREFIX ALL SHIPPING MARKS
WITH (CR)
THIS STEEL IS FOR THE CAR
RENTAL BUILDING BLDG. ONLY

BILL OF MATERIAL

SHIPPING BILL		SHOP BILL						
NO. Pcs.	ERECTION MARK	NO.	SHAPE	LENGTH FT.	LENGTH IN.	ASSY. MARK	REMARKS	WEIGHT
	D1C1PL	2	HSS–4X4X3/16	12	11⅞		(SQ 2 E)	
	pa1	2	PL ⅝X10	0	10			
	pb1	2	PL ½X4	0	4			
	pc1	4	PL ⅜X3½	0	9			
	D1C2	1	HSS–4X4X3/16	11	9⅛		(SQ 2 E)	
	pa1	1	PL ⅝X10	0	10			
	pd1	1	PL ½X6	0	10			
	D1C3	1	HSS–4X4X3/16	12	2¾		(SQ 2 E)	
	pa1	2	PL ⅝X10	0	10			
	pd1	2	PL ½X6	0	10			
	D1C4	1	HSS–4X4X3/16	10	6 5/16		(SQ 2 E)	
	pa1	1	PL ⅝X10	0	10			
	pg1	1	PL ½X6	0	10			

FOR APPROVAL ONLY

REFERENCE DRWG. / LOCATION

MATERIAL (UNLESS NOTED)
ALL STEEL ASTM A992
HSS A500 GRADE B
STRUC. PIPES A53 GRADE B
Ls, PLs & MISC. MATERIAL ASTM A36

SURFACE PREPARATION
Wire Brush

SHOP PAINT
1 S/C Red

SHOP CONNECTIONS/ELECTRODES
E70XX

FIELD CONNECTIONS: A325 SC BOLTS
HOLES (U.N.): 13/16Ø

REV.	DATE	DESCRIPTION	PRINTS	NO.	DATE	NO.	DATE
			FIELD				
			SHOP				
			APPROVAL				

B & P IRON COMPANY, INC.
2514 West Point Ave.
College Park, Ga.
Tel. (404) 767–0546
Fax. (404) 767–4232

JOB: ENTERPRISE CAR RENTAL BLDG.
2202 COBB PARKWAY
LOCATION: KENNESAW, GA.
CUSTOMER: CHANDLEE & SONS
ARCHITECT: LEE'S DESIGN & ASSOCIATES, INC

DETAILER: MHA DATE: 1/17
CHECKER: DATE:
IN CHARGE OF:

JOB NO.: 2385
DRWG. NO.: (TR)D1